课前提问

1 [illegible]

2 [illegible]

([illegible])

教师俱乐部
www.910club.cn

[illegible]

−[illegible]

① [illegible]

② [illegible]

−[illegible]

① [illegible]

② [illegible]

③ [illegible]

[illegible]

[illegible]

[illegible]

[illegible]

[illegible]

[illegible]

[illegible]

[illegible]

[illegible]

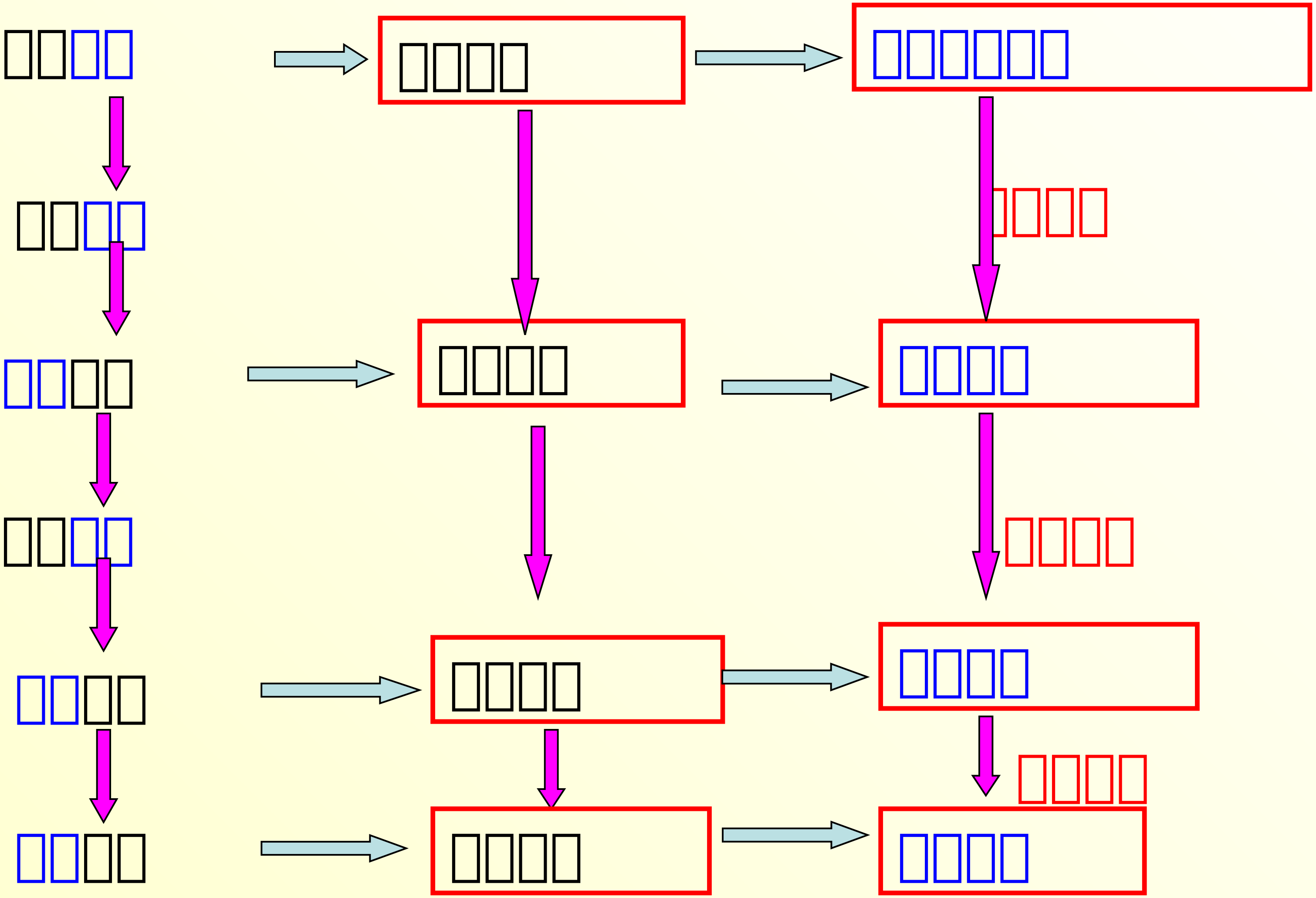

[illegible]

[illegible]

[illegible] [illegible]

[illegible] [illegible]

[illegible] [illegible]

humanism

①

②

③

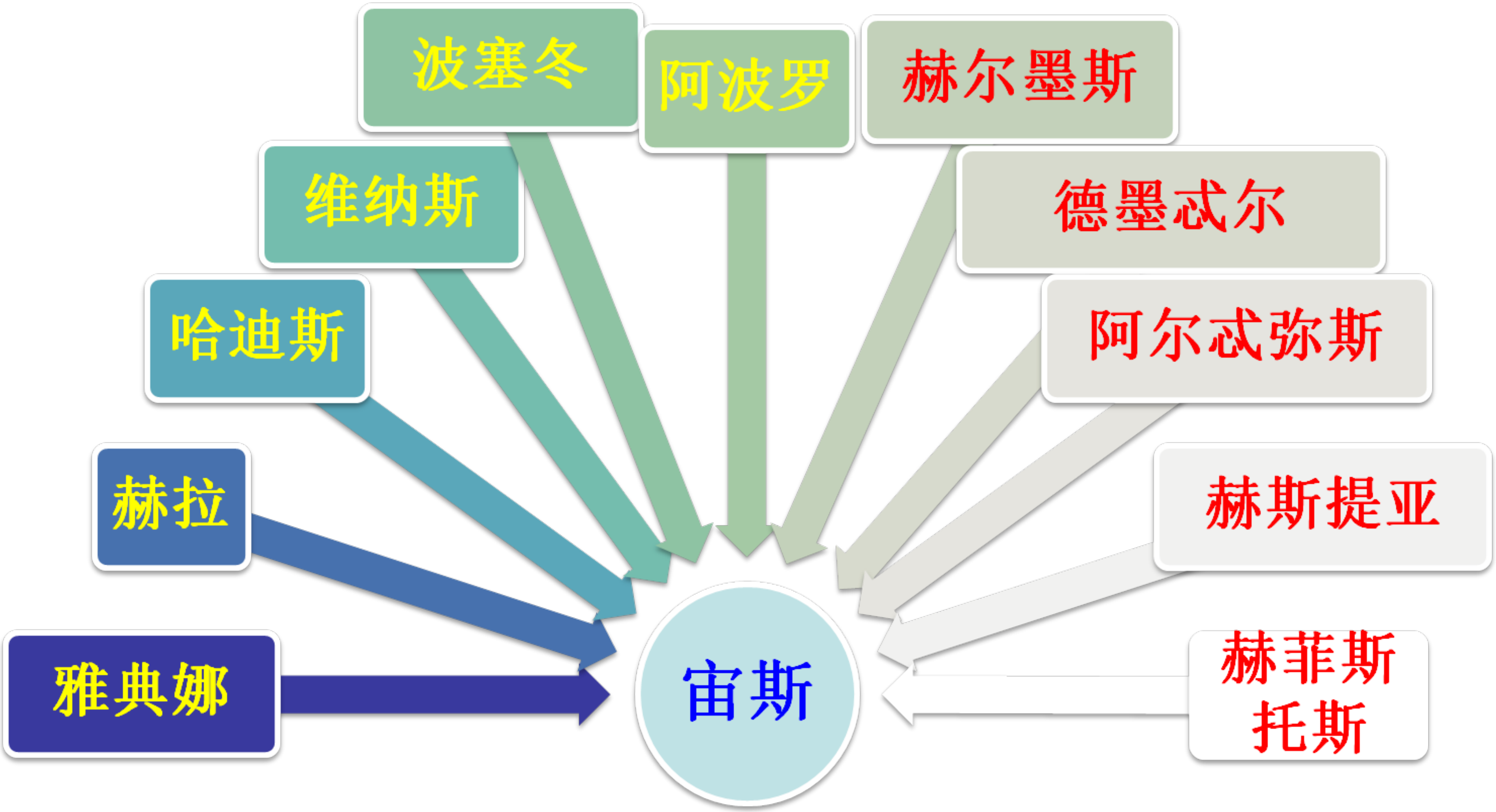
波塞冬
阿波罗
赫尔墨斯
维纳斯
德墨忒尔
哈迪斯
阿尔忒弥斯
赫拉
赫斯提亚
雅典娜
宙斯
赫菲斯
托斯

[illegible]

[illegible] 7 [illegible]
[illegible]

“[illegible]”

—[illegible]（[illegible] 6 [illegible]）

“[illegible]”

—[illegible]（[illegible] 6 [illegible]）

“[illegible]”—[illegible] 5 [illegible]

[illegible]

[illegible]

[illegible]

[illegible]

[illegible]

[illegible] 8 [illegible]

[illegible] 6 [illegible]

[illegible] 6 [illegible]

[illegible] 5 [illegible]

[illegible] 4 [illegible]

[illegible]

[illegible]

[illegible]

[illegible]

[illegible]

[illegible]

[illegible] 495— [illegible] 429 [illegible]

[illegible]

[illegible]
[illegible]“[illegible]”[illegible]“[illegible]”[illegible]

[illegible]

[illegible]—[illegible]

[illegible]—[illegible]

[illegible]—[illegible]

[illegible]
[illegible]

2 [illegible] 1 [illegible] 2 [illegible] 3 [illegible] 4 [illegible]

“[illegible]”

—[illegible]

“[illegible]”—[illegible]

“Man is the measure of all things”

◆ [illegible]

[illegible]

[illegible]“[illegible]”

[illegible]

[illegible]“[illegible]”

[illegible]

[illegible]

[illegible]1[illegible]

[illegible]2[illegible]

“[illegible]……[illegible]……[illegible]……[illegible]”

—[illegible]

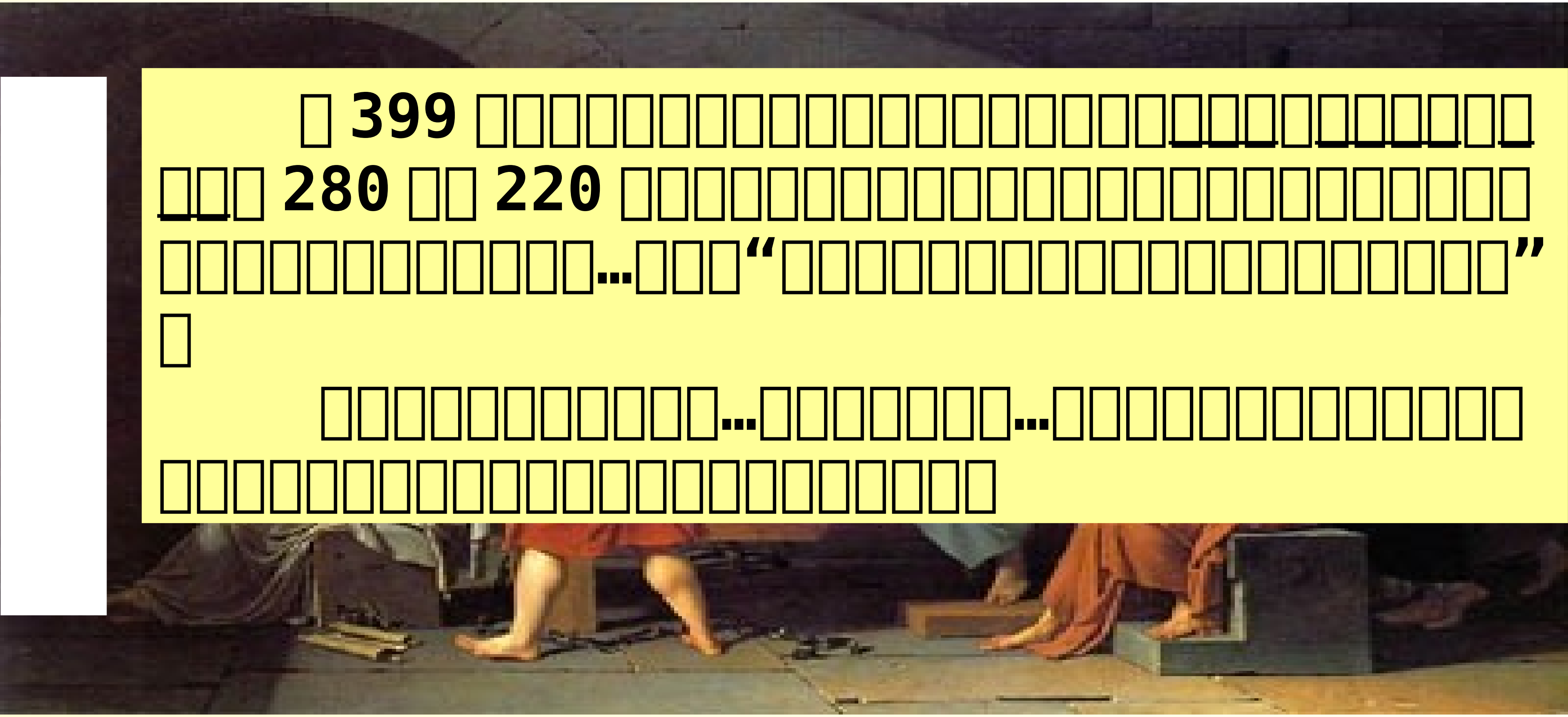

[illegible] 399 [illegible]

[illegible] 280 [illegible] 220 [illegible]

[illegible]…[illegible]“[illegible]”

[illegible]…[illegible]…[illegible]

[illegible]

[illegible]

[illegible]

[illegible]

[illegible] 1 [illegible]

[illegible] 2 [illegible]

(3) [illegible]

[illegible]

[illegible] 1 [illegible]

[illegible] 2 [illegible]“[illegible]”[illegible]

[illegible]

[illegible]469-399[illegible]

[illegible]551-479[illegible]

[illegible] [illegible]5[illegible]

[illegible] [illegible]

[illegible] [illegible]“[illegible]”[illegible]

[illegible] [illegible]

[illegible] “[illegible]”“[illegible]”

[illegible]

[illegible]

[illegible]

① [illegible]

[illegible] ([illegible]) [illegible]

[illegible] ([illegible]) [illegible]

[illegible]

② [illegible]

③ [illegible]

[illegible]

④ [illegible]

Let Plato be your friend, and Aristotle, but more let your friend be truth ([illegible])

① [illegible] ([illegible]), [illegible]

② [illegible]“[illegible]”[illegible]

③ [illegible]

④ [illegible]“[illegible]”[illegible]

⑤ [illegible] 500 [illegible] 50 [illegible]

⑥ [illegible] 100 [illegible]

[illegible]
——[illegible]

[illegible]

[illegible]“[illegible]”[illegible]——[illegible]

[illegible]“[illegible]”[illegible]——[illegible]

[illegible]“[illegible]”[illegible]——[illegible]